200 mm

287 mm

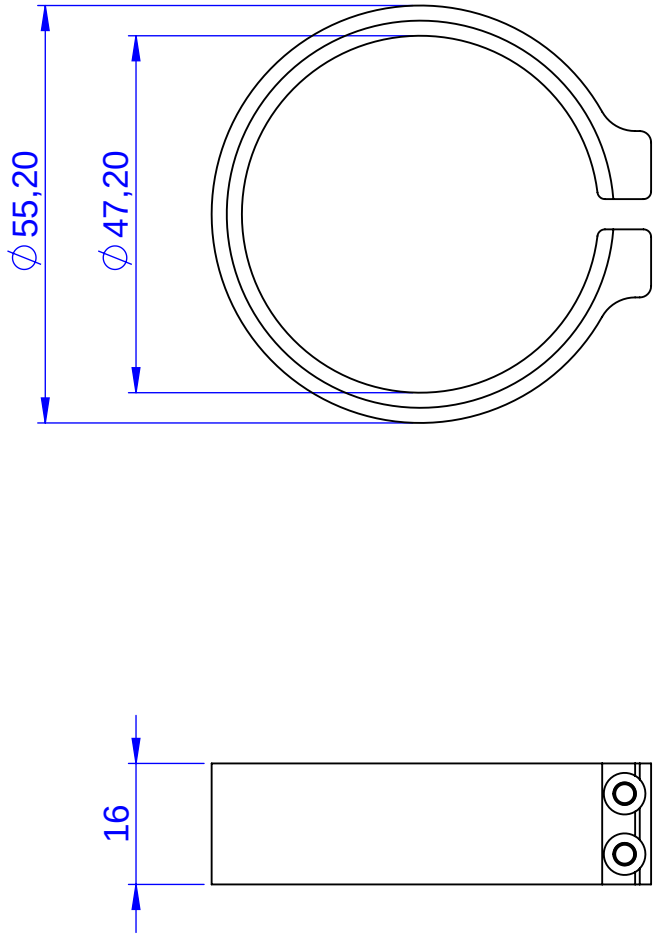

#1757 Clamping ring 47.2 x 16 mm

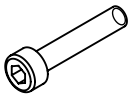

proper screws: #2209 Screw M3 x 16, socket head, stainless

This part is compatible only with our products.

DIVESOFT

Part: Clamping ring for DSV for ISC Megalodon
Part No: 1757

Units		Scale	Size	Sheet	Date
mm		1:1	A4	1 of 1	27.9.2018