200 mm

287 mm

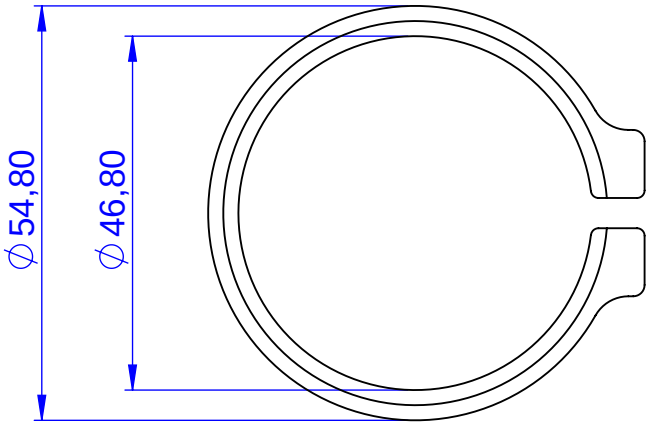

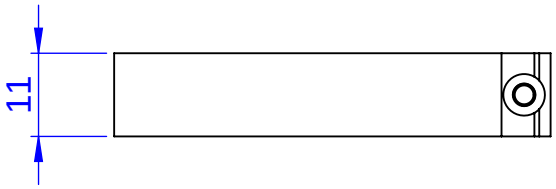

#1758 Clamping ring 46.8 x 11

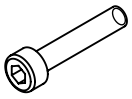

proper screws: #2209 Screw M3 x 16, socket head, stainless

This part is compatible only with our products.

DIVESOFT

Part: Clamping ring for DSV for rEvo
Part No: 1758

Units		Scale	Size	Sheet	Date
mm		1:1	A4	1 of 1	27.9.2018