200 mm

287 mm

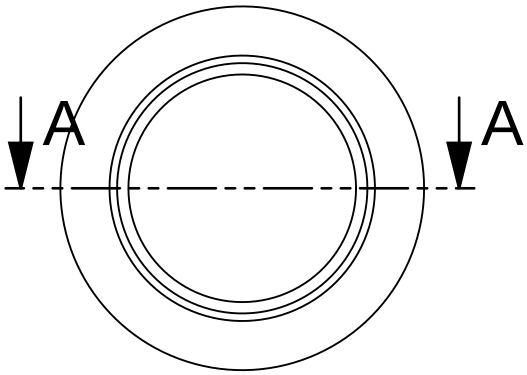

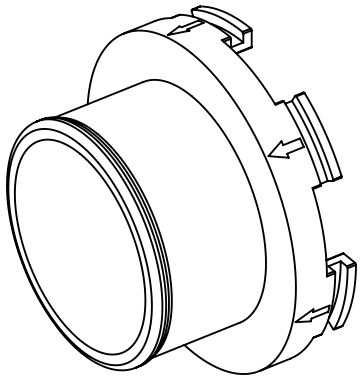

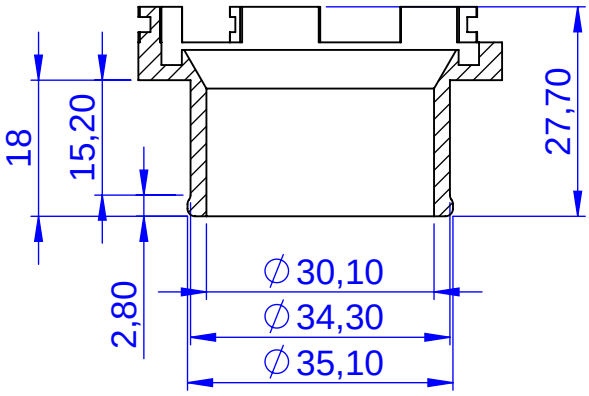

This part is compatible only with our products.

DIVESOFT

Part: BOV/DSV hose nipples for JJ-CCR/O2ptima CCR
Part No: 8162

Units		Scale	Size	Sheet	Date
mm		1:1	A4	1 of 1	27.9.2018